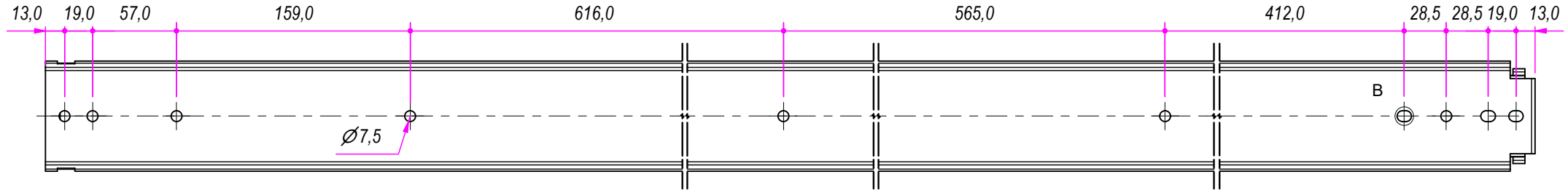

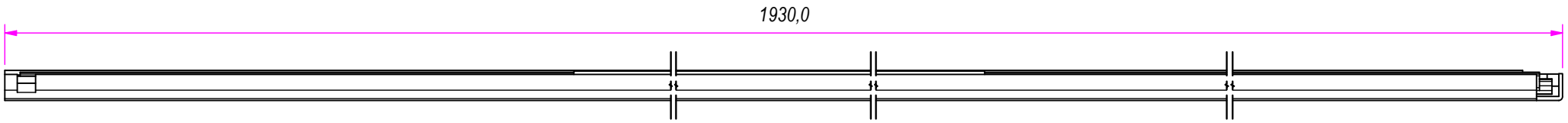

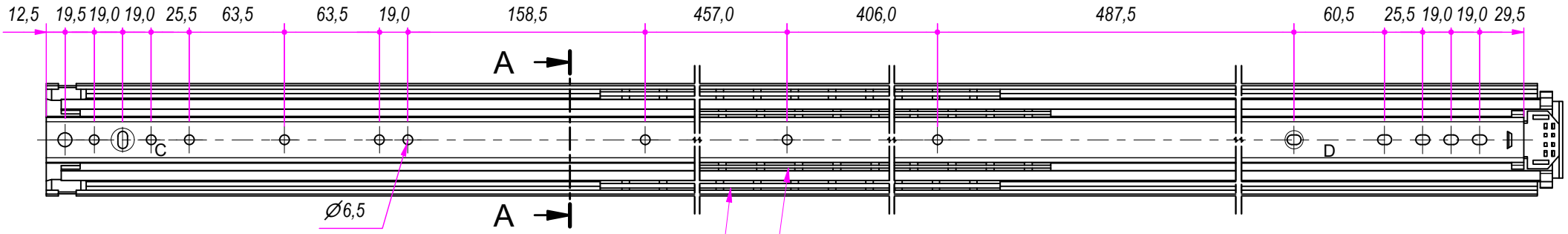

SEZ. A-A

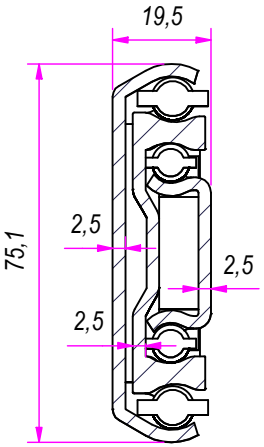

B (1 : 1)

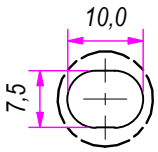

C (1 : 1)

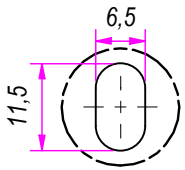

D (1 : 1)

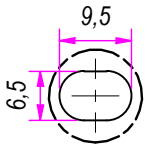

DESIGNED BY: F.Dino	CHECKED AND APPROVED BY: L. Paleari	REVISION:	DATE: 17/03/2022	CODE: 851900
RAM INDUSTRIE	GENERAL TOLLERANCE: SS-ISO-2768-1M		UNIT: mm	SCALE:	SHEET: 1 of 2
	DESCRIPTION:		MATERIAL: Cold rolled steel	
	DEVICE:		PAIR WEIGHT: 19,0 Kg	02C

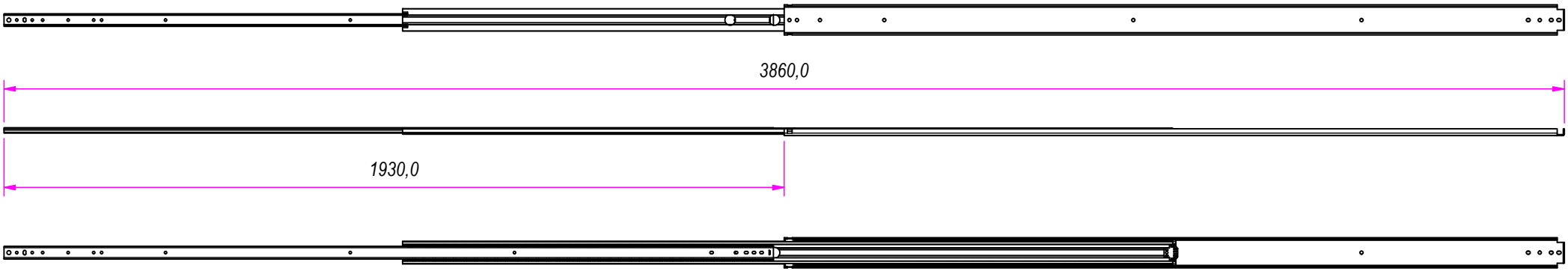

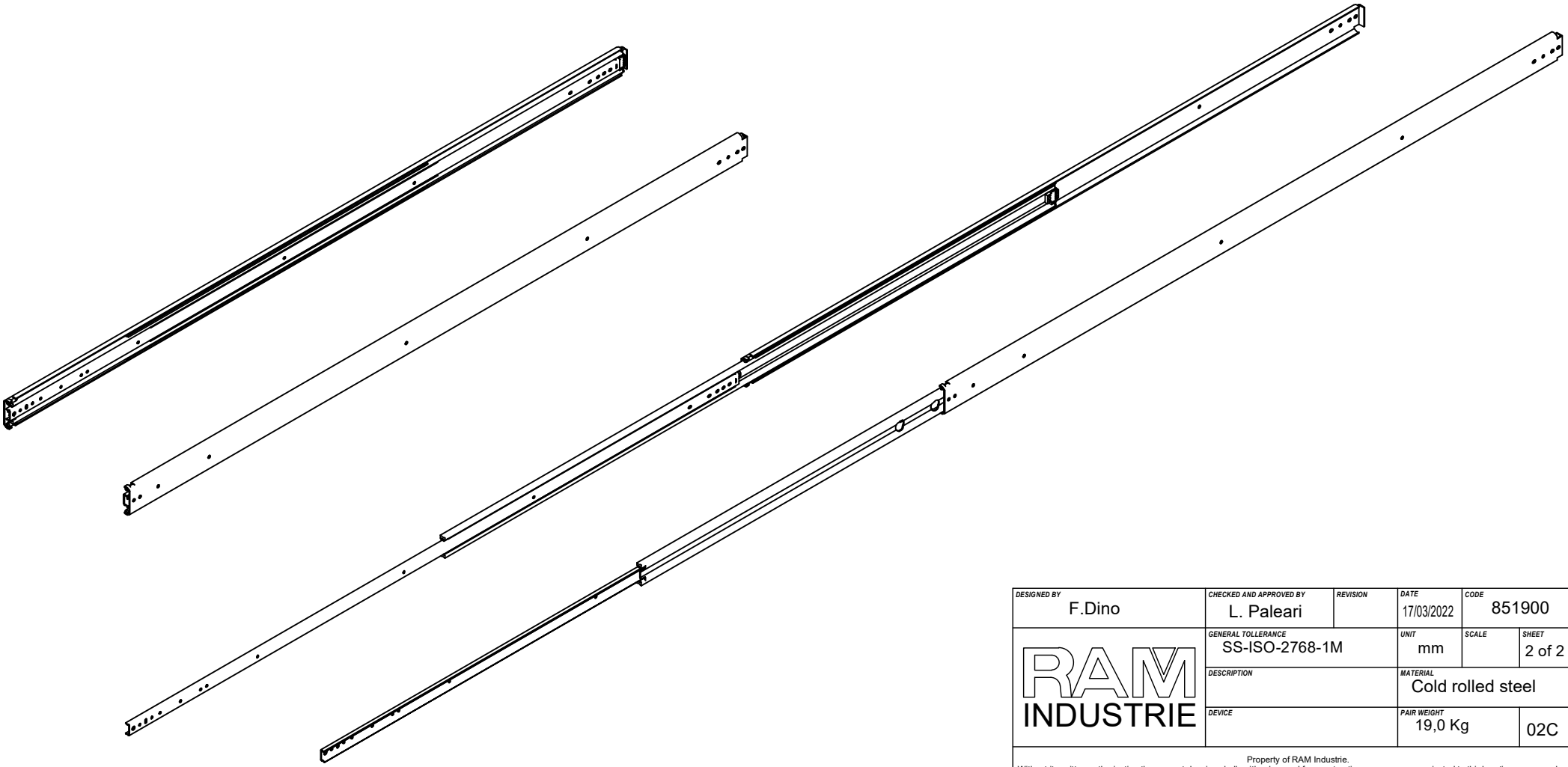

DESIGNED BY F.Dino	CHECKED AND APPROVED BY L. Paleari	REVISION	DATE 17/03/2022	CODE 851900
RAM INDUSTRIE	GENERAL TOLLERANCE SS-ISO-2768-1M		UNIT mm	SCALE	SHEET 2 of 2
	DESCRIPTION		MATERIAL Cold rolled steel	
	DEVICE		PAIR WEIGHT 19,0 Kg	02C