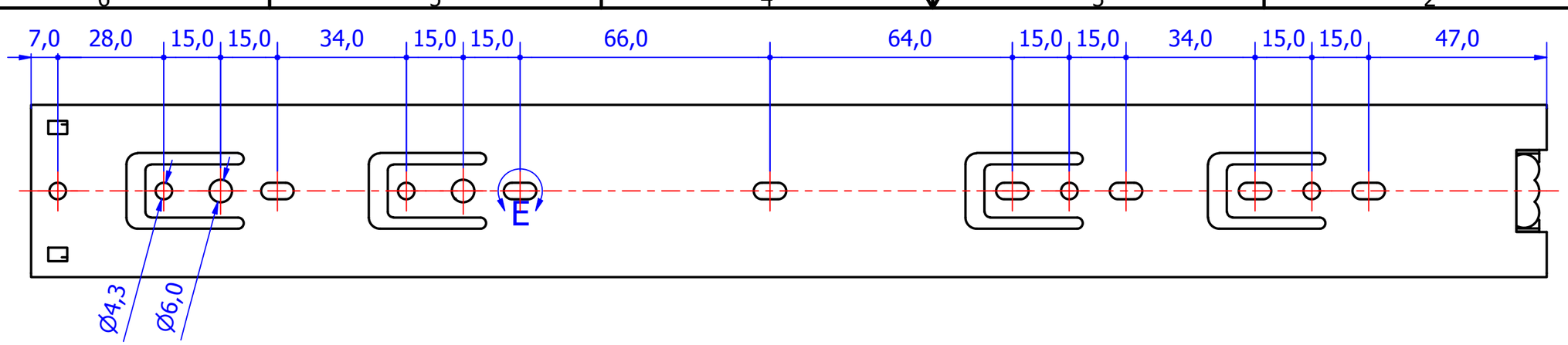

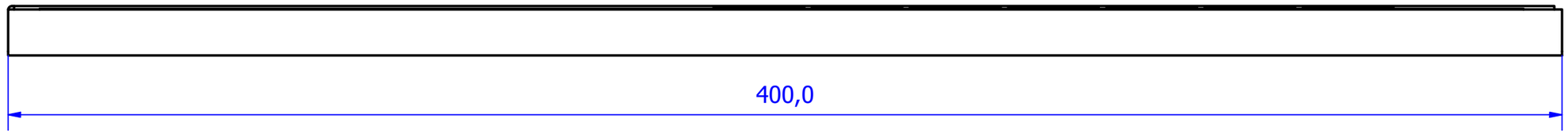

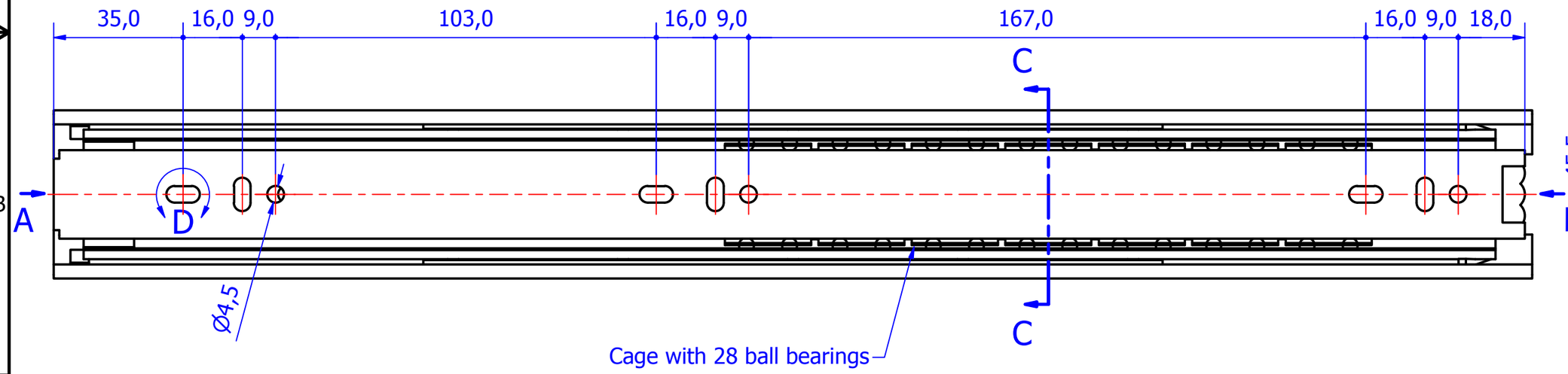

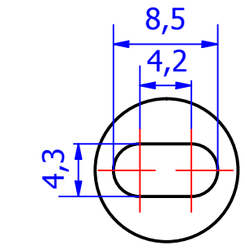

E (2 : 1)

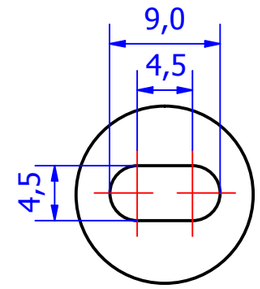

D (2 : 1)

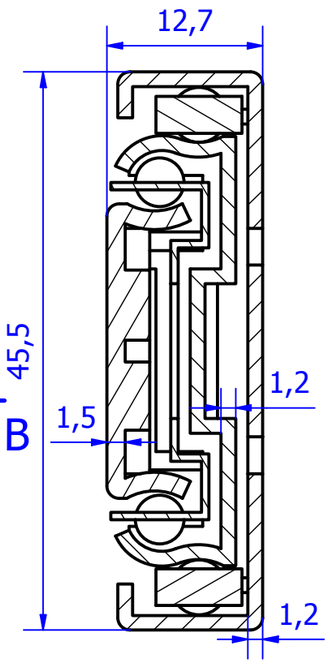

C-C (2 : 1)

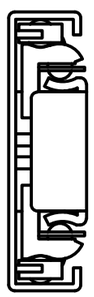

A (1 : 1)

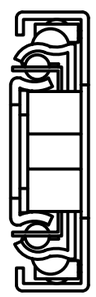

B (1 : 1)

Designed by Cattaneo Mattia	Checked and Approved by Paleari Loris	Unit mm	Date 17.2.15	Item 48400
RAM INDUSTRIE	General tolerance SS-ISO-2768-1M	Cycles test	Salt spray test	L/O Label ✓
	Packaging Carton 10 sets/Packed R+R		Material Zinc coated steel	Sheet 1 of 2
	Device		Pair Weight 1.227 Kg	02C

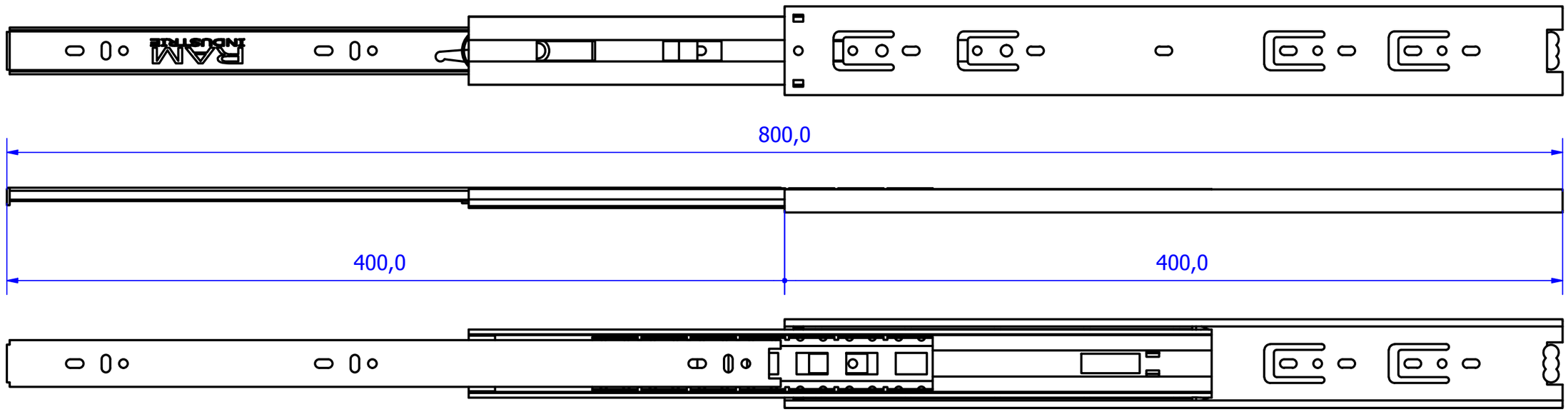

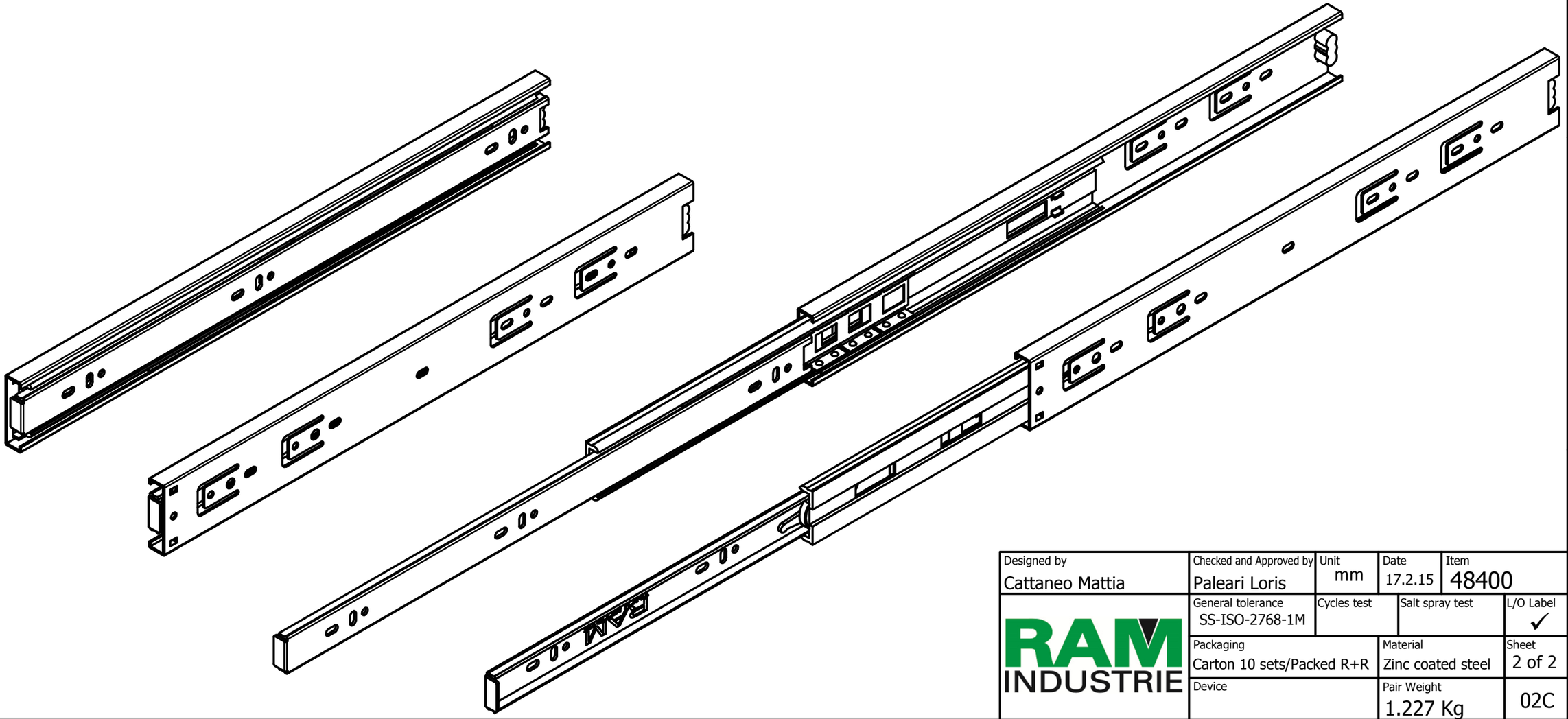

Designed by Cattaneo Mattia	Checked and Approved by Paleari Loris	Unit mm	Date 17.2.15	Item 48400
RAM INDUSTRIE	General tolerance SS-ISO-2768-1M	Cycles test	Salt spray test	L/O Label ✓
	Packaging Carton 10 sets/Packed R+R		Material Zinc coated steel	Sheet 2 of 2
	Device		Pair Weight 1.227 Kg	02C